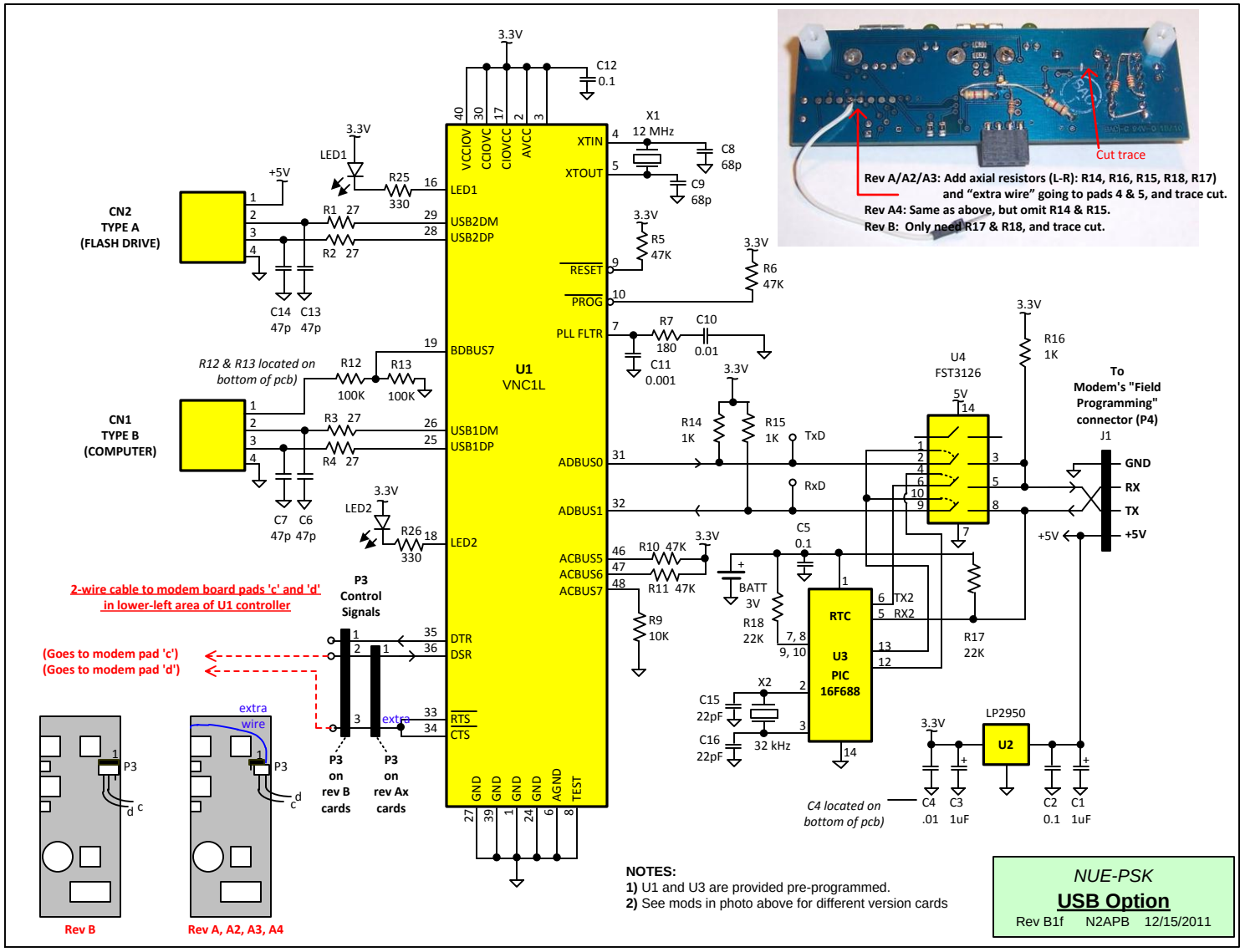
3.3V
C12
0.1
VCCIOV
CCIOVC
CIOVCC
AVCC
XTIN
XTOUT
X1
12 MHz
C8
68p
C9
68p
LED1
R25
330
+5V
CN2
TYPE A
(FLASH DRIVE)
R1 27
R2 27
C14 47p
C13 47p
LED1
USB2DM
USB2DP
RESET
PROG
R5
47K
R6
47K
PLL FLTR
R7
180
C10
0.01
C11
0.001
BDBUS7
R12 & R13 located on bottom of pcb)
R12
100K
R13
100K
U1
VNC1L
CN1
TYPE B
(COMPUTER)
R3 27
R4 27
C7 47p
C6 47p
USB1DM
USB1DP
ADBUS0
ADBUS1
LED2
R26
330
ACBUS5
ACBUS6
ACBUS7
R10 47K
R11 47K
R9
10K
R14
1K
R15
1K
TxD
RxD
U4
FST3126
5V
R16
1K
To
Modem's "Field
Programming"
connector (P4)
J1
GND
RX
TX
+5V
C5
0.1
BATT
3V
R18
22K
RTC
U3
PIC
16F688
TX2
RX2
R17
22K
2-wire cable to modem board pads 'c' and 'd'
in lower-left area of U1 controller
P3
Control
Signals
(Goes to modem pad 'c')
(Goes to modem pad 'd')
DTR
DSR
RTS
CTS
extra
wire
P3
on
rev B
cards
P3
on
rev Ax
cards
C15
22pF
C16
22pF
X2
32 kHz
LP2950
U2
C4 located on bottom of pcb)
C4 .01
C3 1uF
C2 0.1
C1 1uF
GND
AGND
TEST
Rev B
Rev A, A2, A3, A4
Cut trace
Rev A/A2/A3: Add axial resistors (L-R): R14, R16, R15, R18, R17)
and "extra wire" going to pads 4 & 5, and trace cut.
Rev A4: Same as above, but omit R14 & R15.
Rev B: Only need R17 & R18, and trace cut.
NOTES:
1) U1 and U3 are provided pre-programmed.
2) See mods in photo above for different version cards
NUE-PSK
USB Option
Rev B1f N2APB 12/15/2011